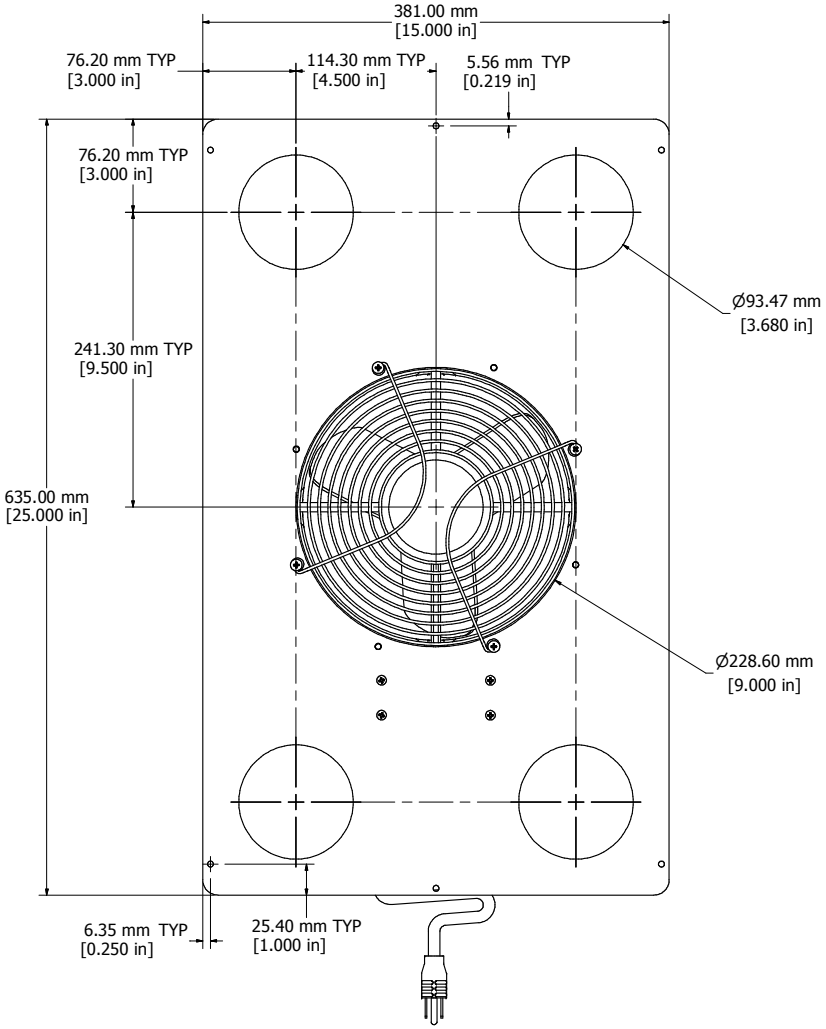

ASSEMBLY - VIEW FROM TOP

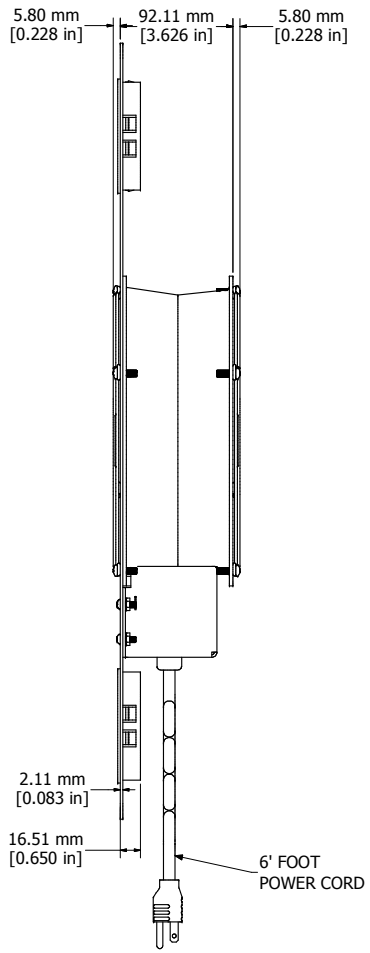

ASSEMBLY - VIEW FROM SIDE

ISOMETRIC VIEW

C2T2423F10CE
Finish - Top - Painted Steel
- Finger Guard - Chrome Plated
Rated - 115 VAC, 50/60 Hz, 0.29 Amps
Free Flow Air Delivery - 550 CFM
Approvals - cURus Recognized UL507 and CSA C22.2 No.113
COLOURS
Black - C2T2423F10CEBK1
Beige - C2T2423F10CECG1
HARDWARE
6 Screws - RoundHead 8-32 x 1/2"
6 Speed Nuts

HAMMOND MANUFACTURING™

C2T2423F10CE

www.hammondmfg.com